• CU 30/CP TYPE

These locking bolts are simple effect linear solenoids, where the shaft has been reinforced to assure the performance in case of radial stress. This model assures the locking with voltage (active security).
It has got lateral and frontal fixing.
Its design makes it good to be used in robotics where an intensive work is required.

Solenoid protection rate: **IP40**
Insulation class: **B (130ºC)**
Standard voltage: **24Vdc**
Duty-cycle (ED%): **100 or 25**
Absorbed power at 20ºC: **7.5W (ED100%); 29W (ED25%)**
Under demand voltage: **Vdc (from 3V to 205V)**
Standard stroke "s": **10mm**
Temperature rising "ΔV_{31}": **70ºC**
Plunger weight (Kg): **0.060**
Locking bolt weight (Kg): **0.330**
Return spring incorporated: **YES**
Return force ED100%(N): **from 1.5(comprissed spring, with voltage) to 1 (free, without voltage)**
Return force ED25%(N): **from 2.8 (comprissed spring, with voltage) to 1.8 (free, without voltage)**
Maximum radial effort (N): **3000N**

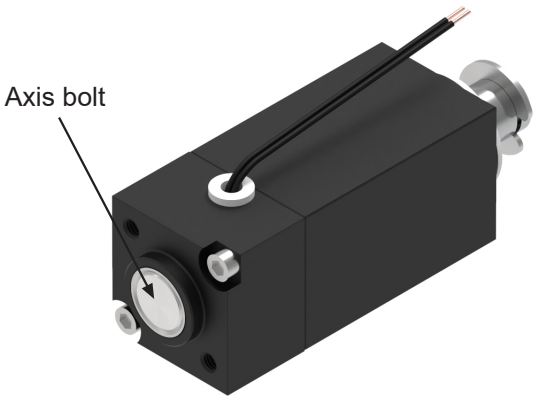

Ordering code:
CU30/CP --V ED100% or ER25%
Example:
24Vdc 100%ED: *CU30/CP100 24Vdc ED100%*
48Vdc 25%ED: *CU30/CP25 48Vdc ED25%*

- Voltage under demand:
They can be manufactured at any voltage between the maximum and minimum voltage values shown in the chart.

- To feed in alterning current the solenoid will have a rectifier mounted in.

- If any change from the original is needed, please contact us.

Solenoid under voltage (s=0mm position)

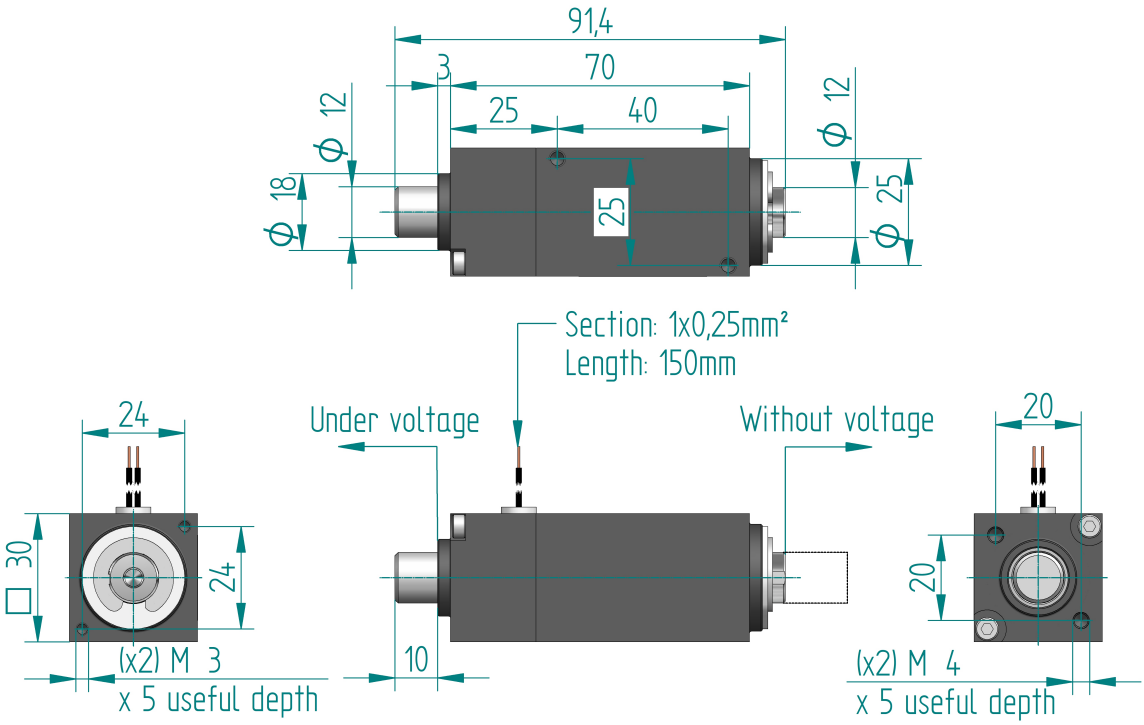

AXIS & Stuifmeel B.V.
Coenecoop 1
2741 PG WADDINXVEEN
+31(0)182-647070
info@axis-stuifmeel.nl
www.axis-stuifmeel.nl